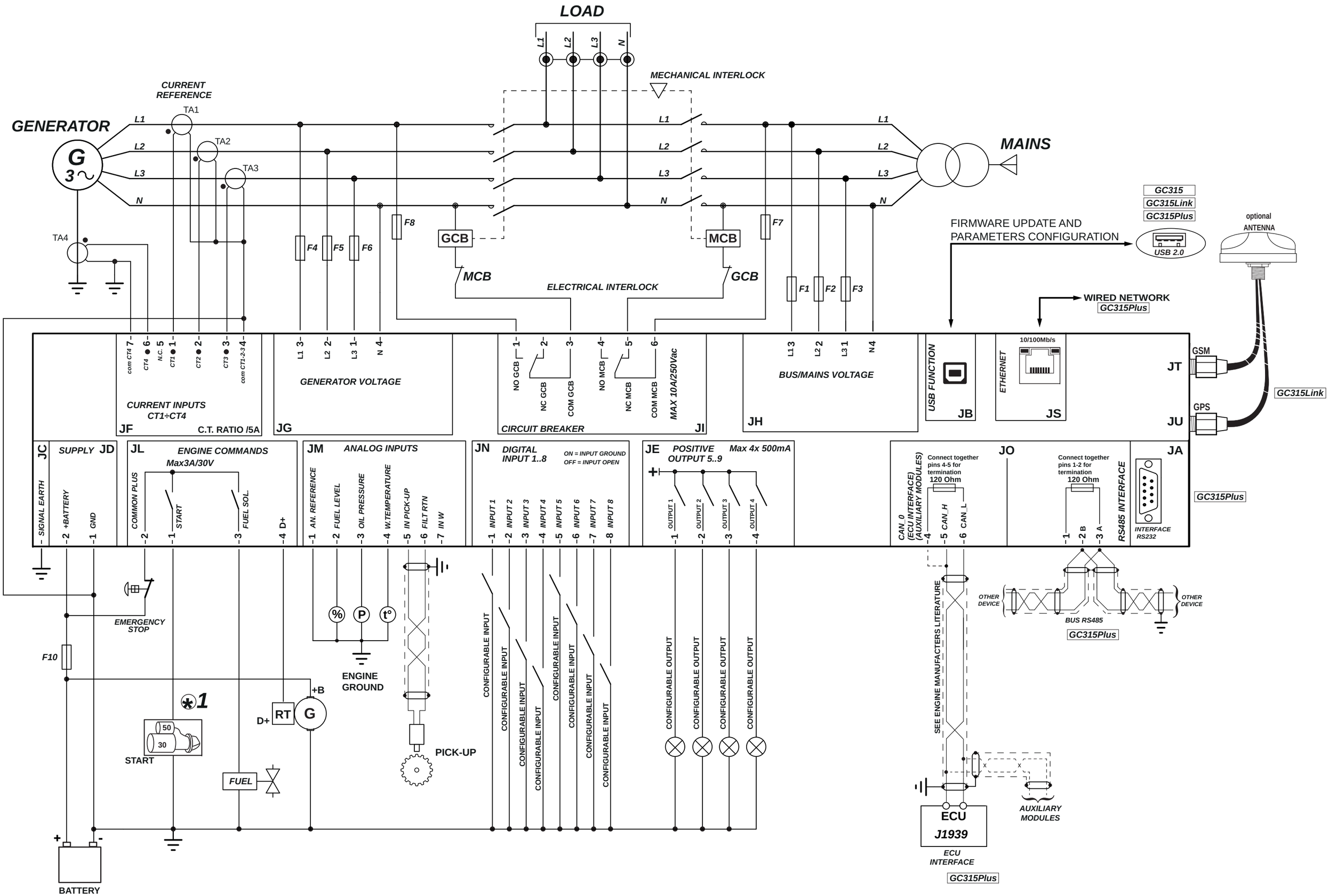

EA0F214110006